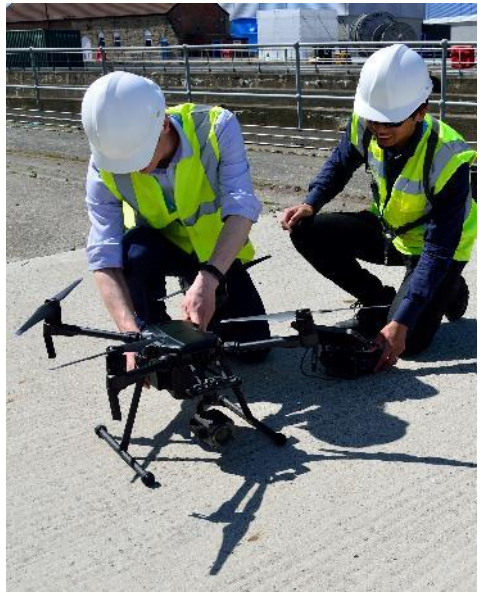

# Energy Storage Solutions and Their Role in Offshore Wind Energy Networks

29/04/2020 | John Nwobu

CATAPULT
Offshore Renewable Energy

# Agenda

- ORE Catapult: Overview
  - Network, Facilities
- Grid Forming & Black Start: Requirements for Storage
  - Principal Stages, Current State, The Future of Black Start, Grid Forming
- Energy Storage Integration in Offshore Wind Networks
  - Overview, Technology Integration
- ORE Catapult Activities

# The Catapult Network

10

## Innovate UK

- Designed to transform the UK's capability for innovation
- Core grant leveraged with industry and other public funding

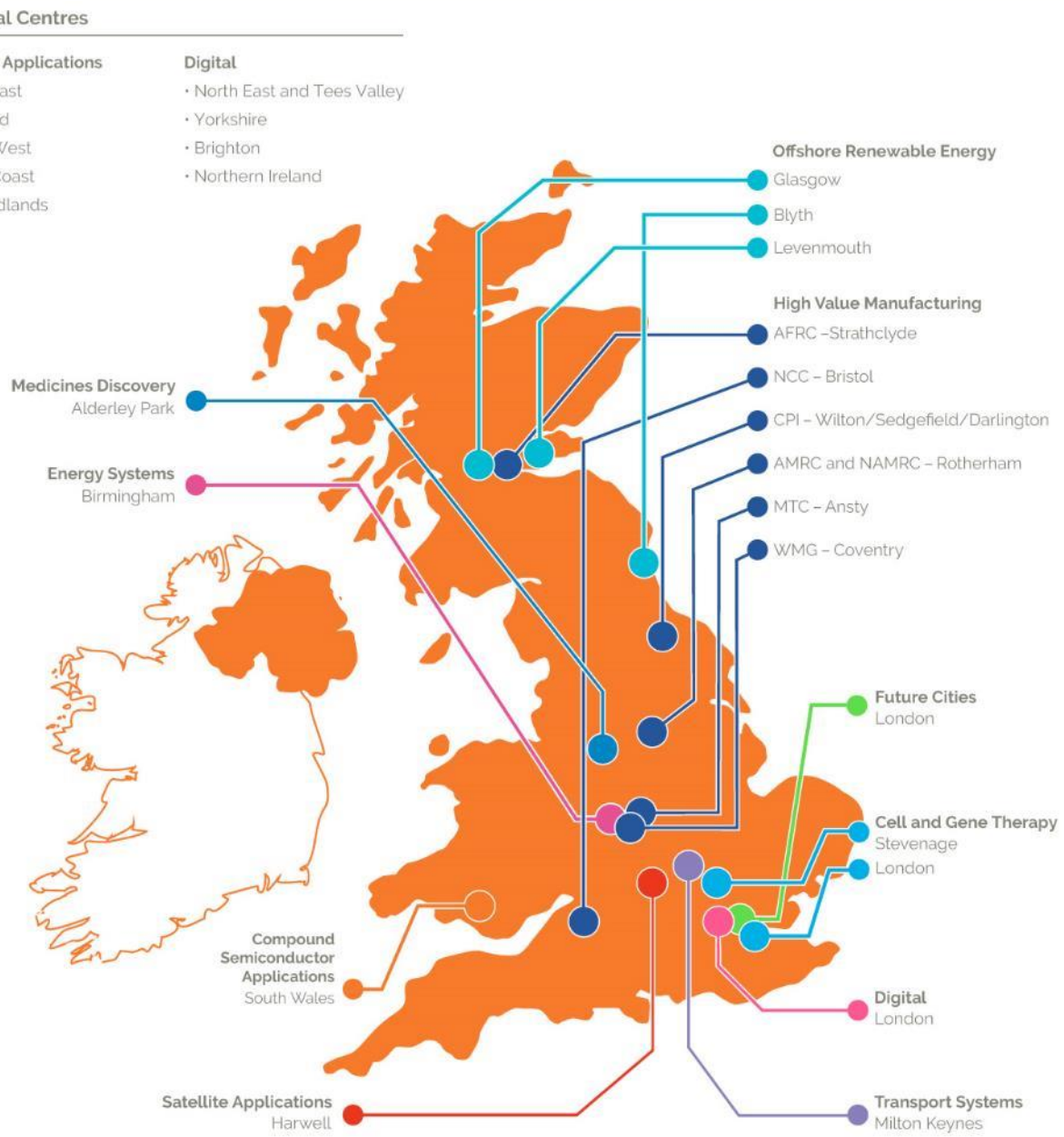

# Grid Forming & Black Start: Requirements for Storage

# Grid forming & Black Start: Overview

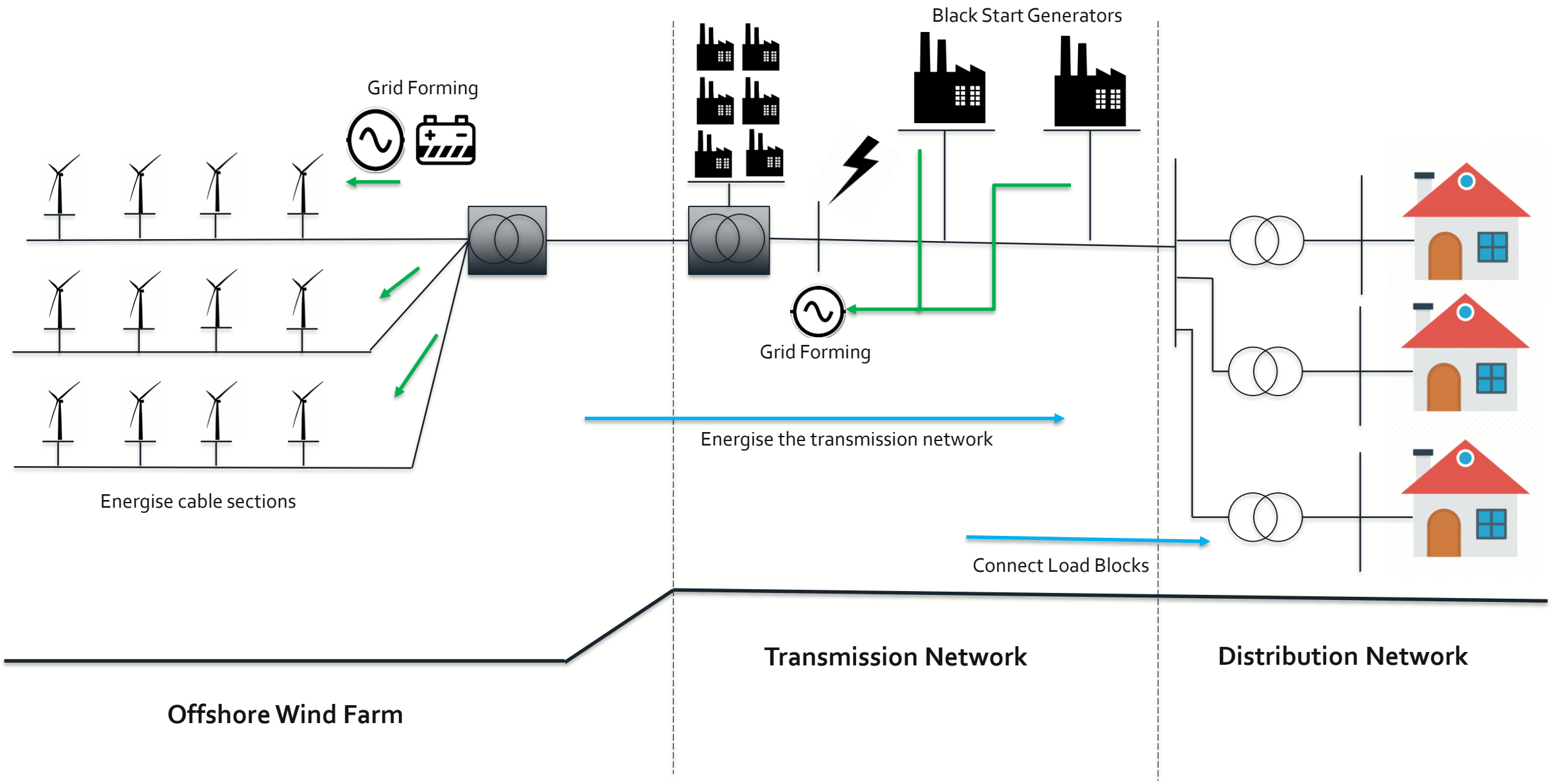

# Black Start – Principal Stages

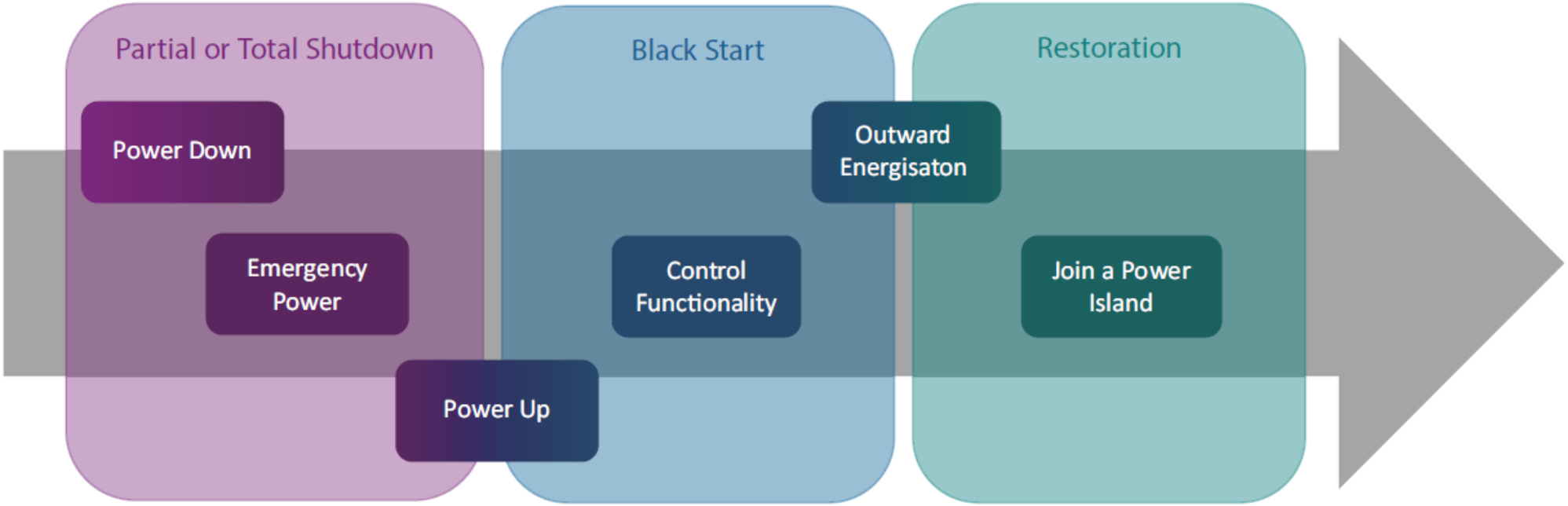


Source: National Grid ESO

## Shutdown/Commissioning Stage

- Site de-energisation
- Emergency Power
- Intervention resources
- Control/communications system
- Auxiliary starting

## Black Starting Stage

- Self Starting
- Grid forming
- Network energisation
- Block loading
- Reactive Power
- Frequency Control
- Availability and Reliability

## Restoration Stage

- Joining a Power Island
- Performance in a Power Island

# Black Start: Overview

## Current State

- The current strategy is largely unchanged  and based on a transmission-led approach of starting large synchronous generators, energising the transmission network, and controlling demand

- Black Start providers must meet certain technical requirements, including the ability to start up without external power supplies

## The Future of Black Start

- National Grid ESO is fully committed to understanding the future of Black Start in GB

- Non-traditional, renewable and DER technologies are already known to be capable of providing certain services that form part of a Black Start. e.g. frequency control.

- Projects in pipeline to understand the capability of black start with non-traditional technologies

    - Black Start from Non-Traditional Technologies (NG ESO)
    - Black Start Capability of Offshore Wind Farms (Carbon Trust's OWA)
    - "Distributed Restart" NIC project (working towards trails)

# Grid Forming

## Grid-Following

matches AC grid voltage and frequency

provides reactive current equal to the steady state rated current during AC faults

## Grid Forming

regulates both instantaneous AC frequency and AC voltage

provides reactive current equal to the steady-state rated current during AC faults

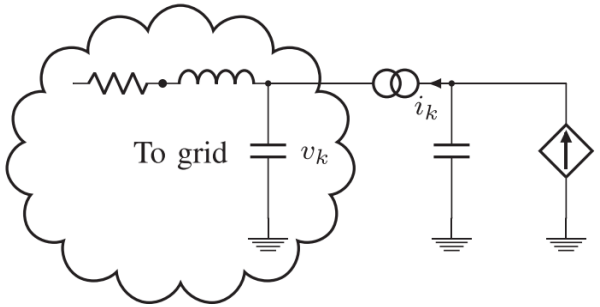


Figure 1: Grid following converter equivalent*

## Synchronous Grid-Forming

Grid-Forming converter able to operate in parallel with other AC frequency regulating equipment and converters

## Virtual Synchronous Machine

(Synchronous) Grid-Forming converter with energy storage delivers extra energy for short time

provides more than steady-state rated current during a fault

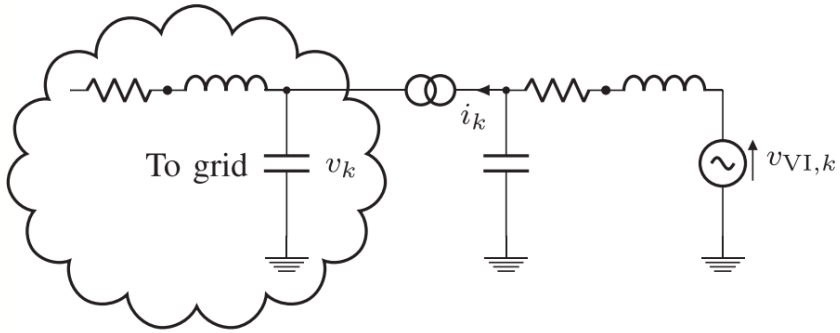


Figure 2: Grid forming converter equivalent*

(1) Source: T&D Europe "Grid Forming Control in HVDC Systems"
(2) Source: * B. K. Poolla, D. Groß and F. Dörfler, "Placement and Implementation of Grid-Forming and Grid-Following Virtual Inertia and Fast Frequency Response," in *IEEE Transactions on Power Systems*, vol. 34, no. 4, pp. 3035-3046, July 2019.

# Grid Forming – Grid Codes

## Current State

ENTSO-E Technical Group (TG) looking at High Penetration of Power Electronic Interfaces and Grid Forming Capabilities linked to satisfying system needs.

TG focus on seven challenge / characteristics during high penetration

1. Create system voltage
2. Contribute to fault level / fault current contribution
3. System survival to allow effective operation of LFDD
4. Sink for harmonics
5. Sink for unbalances
6. Prevent adverse control interaction
7. Contribution to inertia

Latest report from workshop available online.

- National Grid work group (GC0137) starting to look at on Minimum Specification Required for Provision of Virtual Synchronous Machine (VSM) Capability

# Energy Storage Integration in Offshore Wind Networks

# Energy Storage: Overview

## SHORT TERM STORAGE

High Power Delivery and Low Energy Capacity

Pros

- **Fast** reaction times is good for dynamic loading conditions.

Cons

- Last for shorter durations **(< 2hrs)**

Examples: Ultra-capacitor, Lithium-ion battery, Lead Acid battery, flywheels

## LONG TERM STORAGE

Low Power Delivery and High Energy Capacity

Pros

- Last for longer durations **(> 2hrs)**

Cons

- Slower reaction times

Examples: Redox flow batteries and Hydrogen Fuel Cells

## HYBRID STORAGE

Low Power Delivery and High Energy Capacity

Pros

- Short term storage allows for dynamic loading conditions
- Life cycle of Long term storage improved
- Smaller size and improved power efficiency

Trade off

- More power electronics and energy management controls

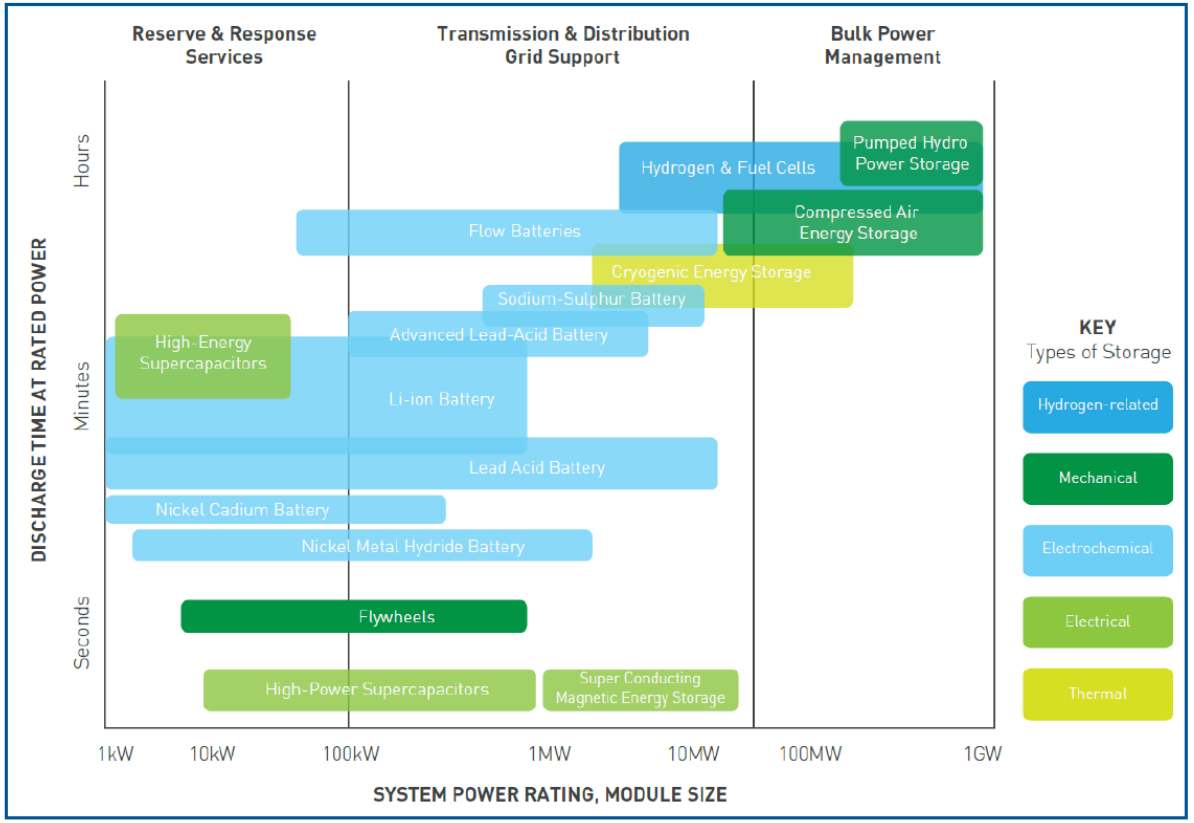


Source: Wind Europe (2017) Wind energy and On-site energy storage

# Energy Storage: Overview

## Considerations for Selection of Storage

- Cost: The cost of the battery per kilowatt use of energy (£/kWh)
- Energy Density: The energy derived per unit volume of cell (kWh/L)
- Power Density: The power derived per unit weight of cell (W/kg)
- Charge/Discharge Cycle: The response time necessary to charge and discharge and the availability of the battery.
- Efficiency: The ratio of power available to power lost during charging and discharging.
- Cycle Life: The number of charge/discharge cycles it can undergo during its lifetime.
- Degradation: a natural process that permanently reduces the amount of energy a battery can store, or the amount of power it can deliver

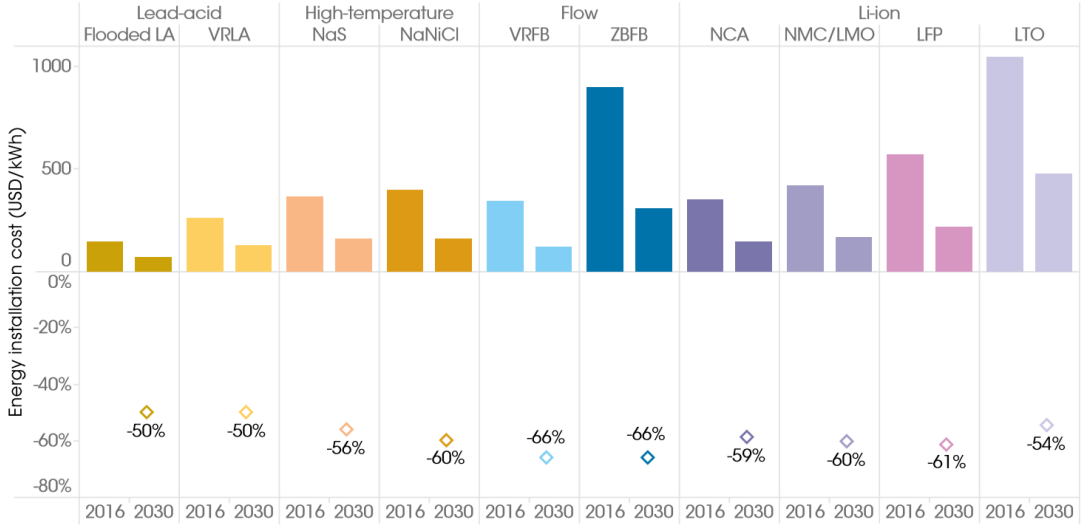


Note: LA = lead-acid; VRLA = valve-regulated lead-acid; NaS = sodium sulphur; NaNiCl = sodium nickel chloride; VRFB = vanadium redox flow battery; ZBFB = zinc bromine flow battery; NCA = nickel cobalt aluminium; NMC/LMO = nickel manganese cobalt oxide/lithium manganese oxide; LFP = lithium iron phosphate; LTO = lithium titanate.

Source: IRENA (2017) Electricity storage and renewables: costs and markets to 2030

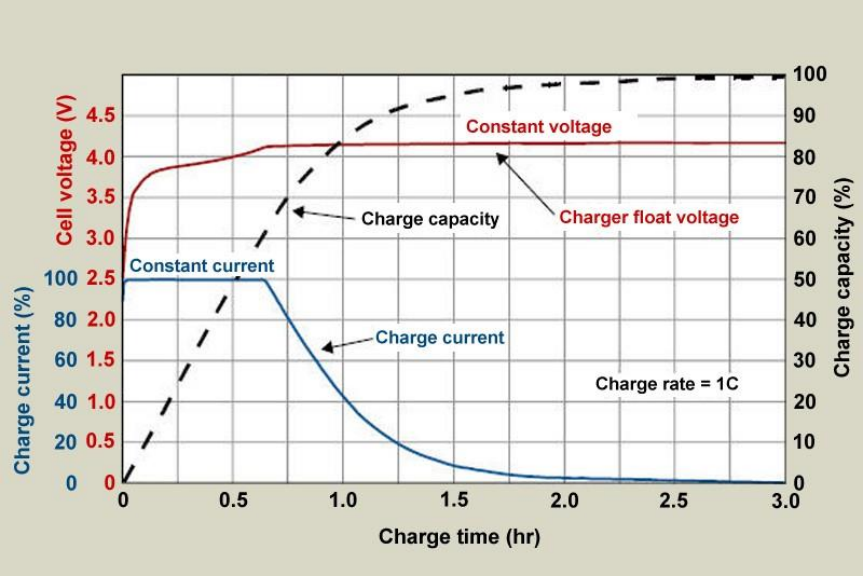


Source: https://batteryuniversity.com/learn/article/charging_lithium_ion_batteries

# Energy Storage: Overview

## Considerations for Selection of Storage (Inverter)

- Connection Topologies: Feasibility of different points of connection as shown below (1),(2), (3),(4),(5),(6),(7)
- DC Voltage rating: The engineering design of stacking cells and modules in batteries depend DC voltage rating of the inverters.
- Cost: The additional cost of an inverter and storage need be justified in deciding the size of the installation making the business.
- Auxiliary Power Requirements: The size of the battery required to cover all the wind turbine auxiliaries during operation.
- Control Coordination-: New control states need be introduced to allow for existing wind turbine and farm controllers with management systems of the batteries.
- Engineering Design: Balance of Plant (BOP) modifications with added storage (i.e. power train modifications, storage system modifications)

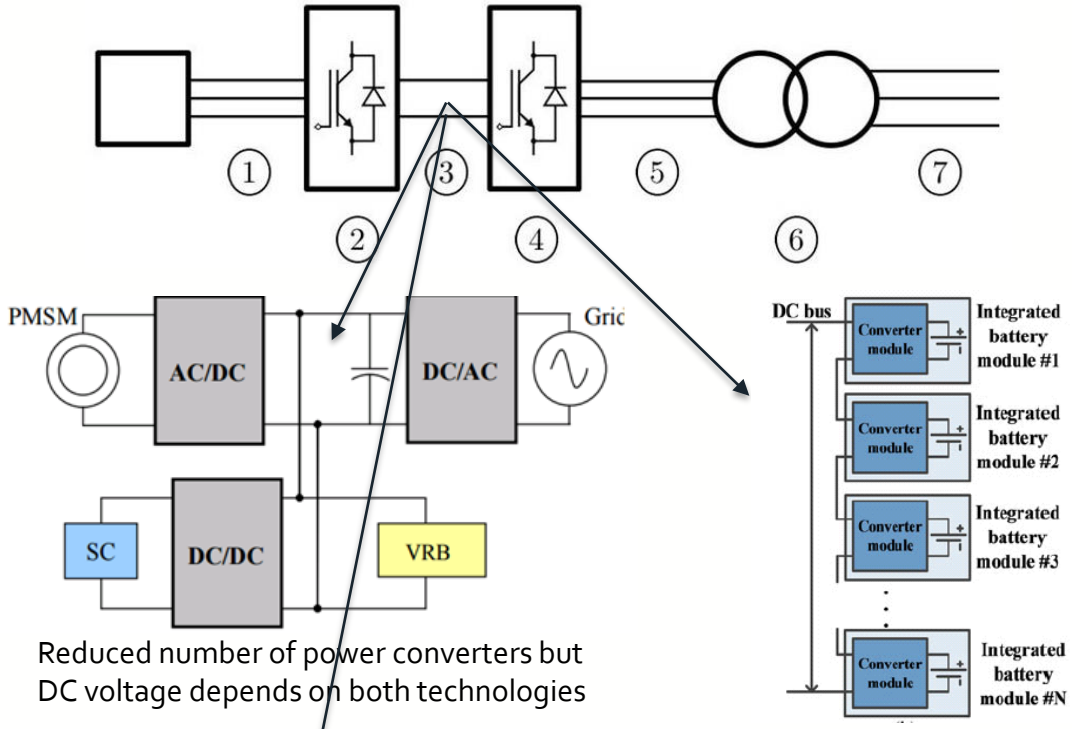


Reduced number of power converters but DC voltage depends on both technologies

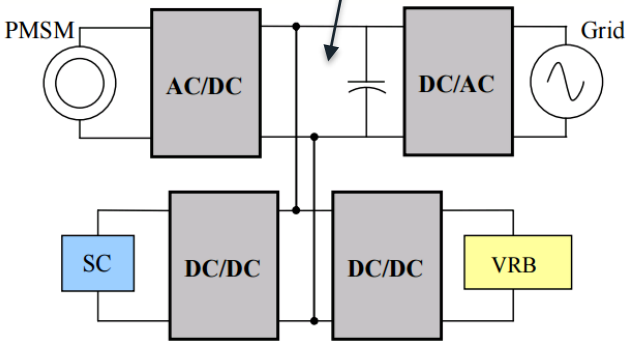


Higher cost of two converters but Independent controls for each energy storage. DC voltage can be controlled effectively.

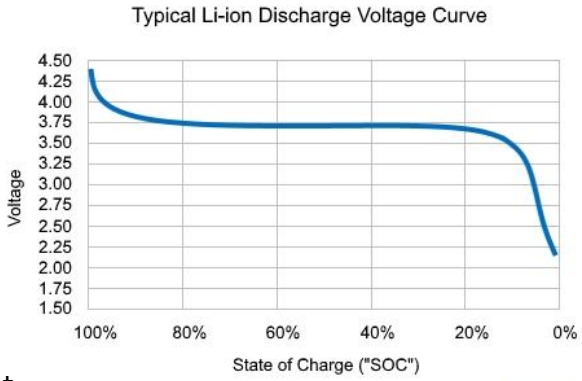

# Energy Storage: Technology Integration

## Power Train Modifications

What modifications need to be made in drive train & their controllers?

What modifications need to made to converters & their controllers?

- Inclusion of islanding and grid forming operation modes
- Co-ordination of wind turbine controller in wind farms during black starting and grid forming

## Embedding Energy Storage

What modifications need to made to coordinate energy storage with the turbine and or wind farm

- How will storage be embedded within the turbine and wind farm.
  - Challenges with weight, operation environment, service maintenance, H&S regulations, recyclability, cost require further analysis;

## Black Start Hierarchy Control

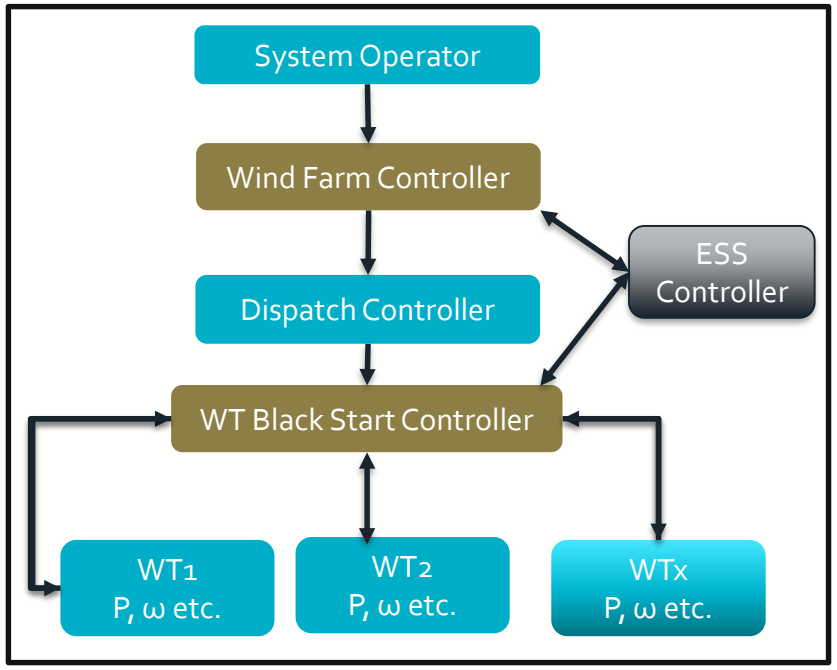


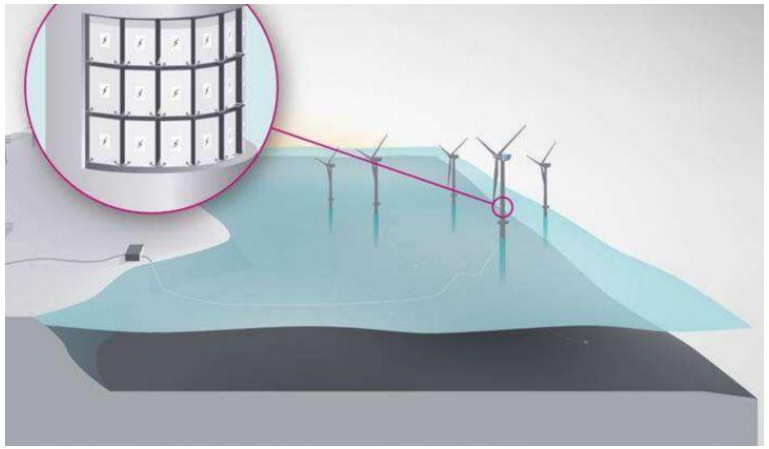

Source: Equinor (BatWind –Hywind)

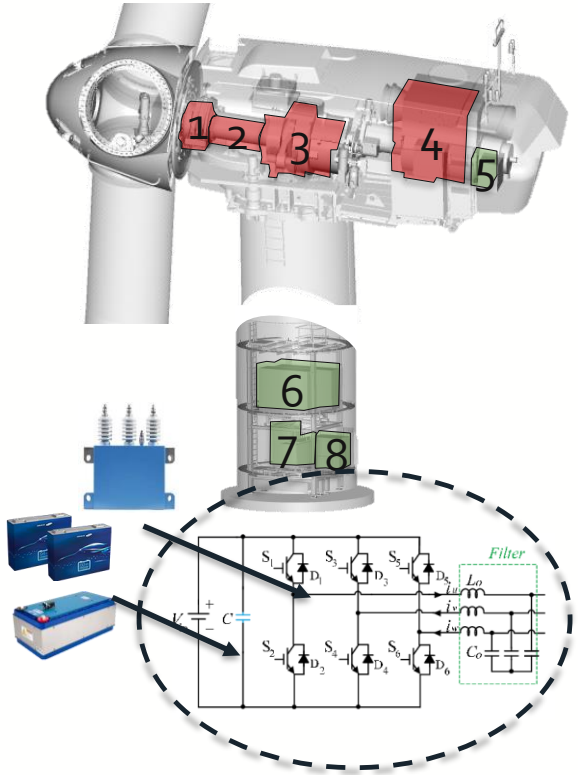

# Energy Storage : Grid Codes

## Current State (Grid Codes)

ENTSO-E an three expert group (EG) to consider and clarify the requirements for other forms of storage are applicable under the three network codes (CNCs)

They resulted to clarifying this by classifying storage into two categories namely

**Synchronous storage technology**

"a storage plant which is connected to the grid directly through a synchronous machine" i.e. covers technologies such as compressed air energy storage (CAES)

**Non-synchronous storage technology**

"a storage plant which is connected partly or in full by power electronics converter or via an asynchronous machine" i.e. covers other technologies such as batteries, supercapacitors and fuel cells etc

| | Task Group Recommendations | Synchronous Storage | Non–Synchronous Storage |
|---|---|---|---|
| 1. | **Clarification of the definition of storage**<br>Electricity storage defined as " the conversion of electrical energy which can be stored, the storing of that energy and the subsequent reconversion of that energy back into the grid | ✓ | ✓ |
| 2. | **Clarification of the definition of storage in demand scenarios**<br>An energy storage plant would be classified as demand or demand response service if they convert electricity into another energy medium for onward conversion without re-converting that energy back into electrical energy at the grid connection point. | ✓ | ✓ |
| 3. | When in discharging mode, an synchronous storage device would be treated in the same way as synchronous PGM | ✓ | ✗ |
| 4. | When in discharging mode, an non-synchronous storage device would be treated in the same way as PPM | ✗ | ✓ |
| 5. | Synchronous flywheels, synchronous compensators and regenerative braking systems should be excluded from the requirements since there is less availability and controllability of these devices | ✗ | ✗ |
| 6. | The current scope of the RfG technical requirements is believed to be applicable appropriately to all storage technologies. (i.e. including voltage and frequency support requirements) | ✓ | ✓ |

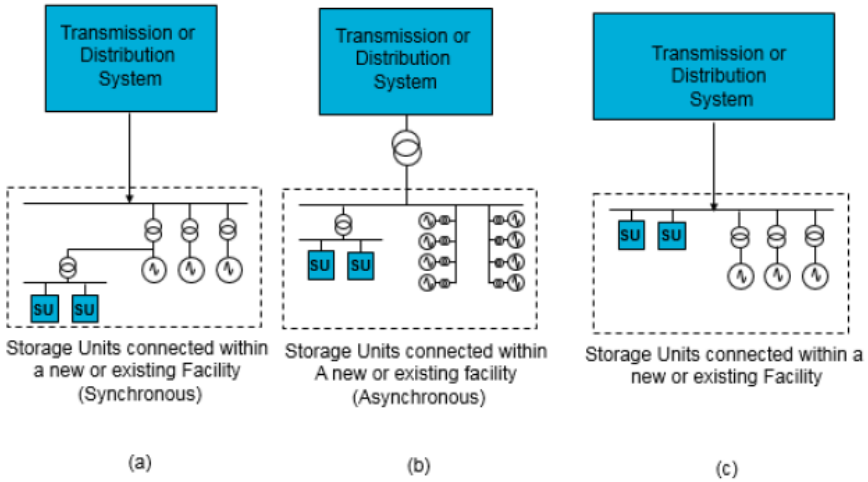


Source: Connection Network Codes assessment: The outcomes of the first three Expert Groups established under Grid Connection European Stakeholder Committee " in *18th Int'l Wind Integration Workshop*, October 2019.

# ORE Catapult's Activities

# Our facilities – Power Train Testing & Validation

We have a range of advanced testing and validation facilities , and we operate the largest turbine test rig and electric grid emulator in the world

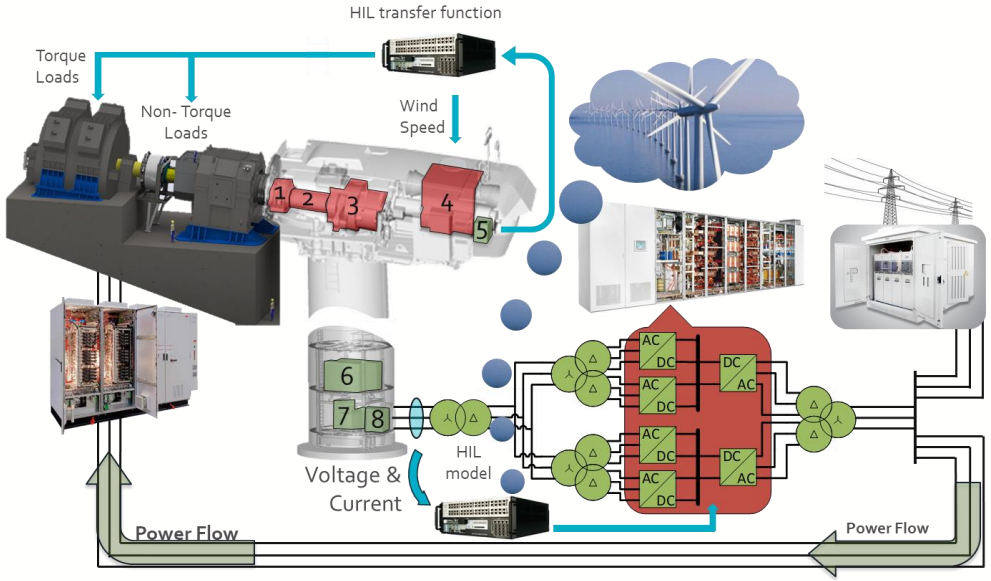


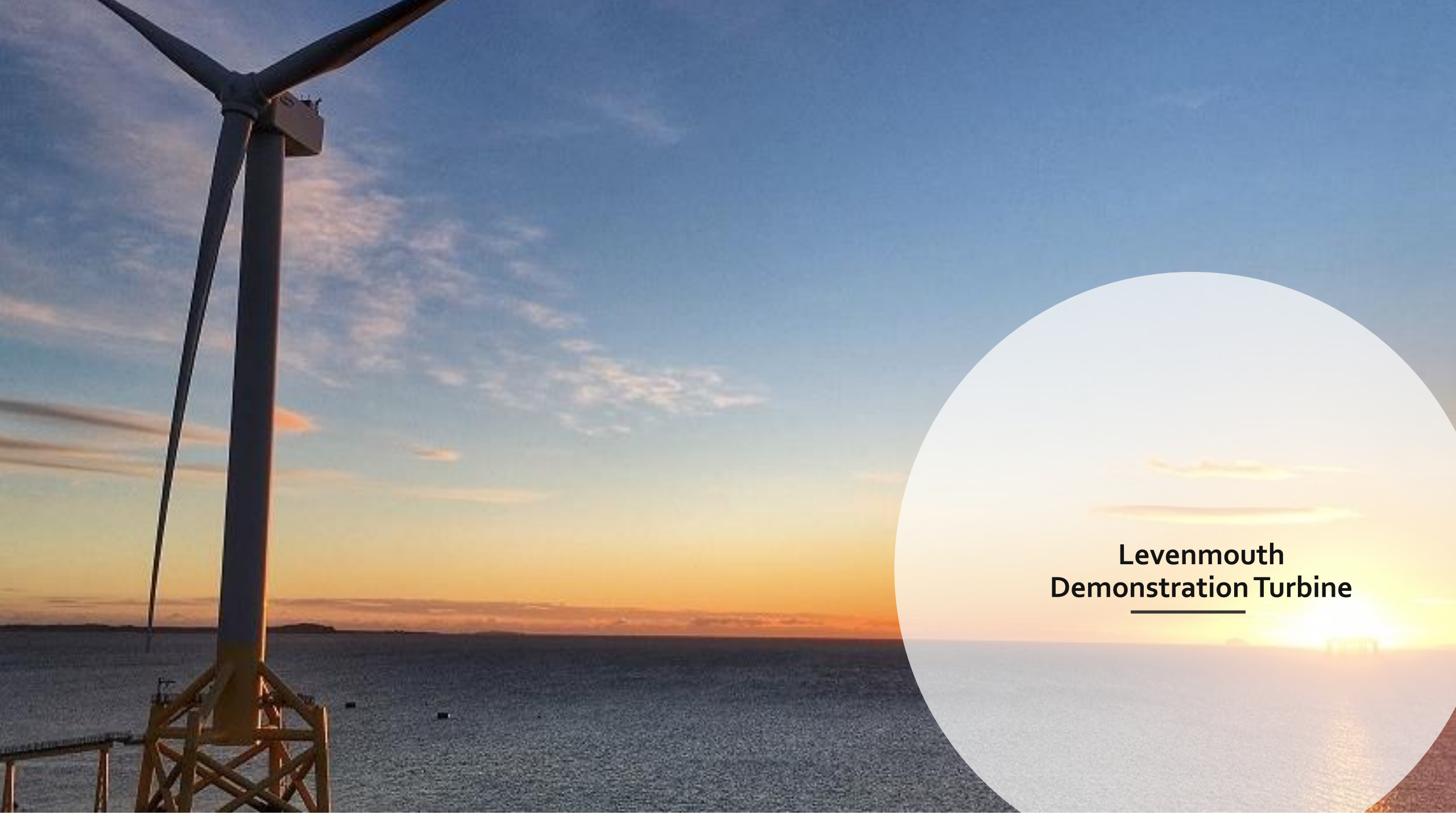

# Levenmouth Demonstration Turbine

# ORE Catapult Activities

**Levenmouth Demonstration Turbine**

- Levenmouth Storage of Networks Development Programme
  - Black Start Feasibility Studies (11kV Network)
  - Techno economics for Storage Options
  - Full poverty around Levenmouth Fife,
  - Levenmouth Power-to-Gas-to-Power  Feasibility Study

**Others**

- Power Networks & Offshore Renewables (PNOR) Joint Research Program Development (Collaboration with PNDC & University of Strathclyde)
  - Battery Storage for Offshore Renewable Optimisation
  - Electricity Storage acceptance Test protocol development
  - Multi-site hardware-in-the-loop platform development

- ORE Catapult Academic Research Hubs
  - PDRA & PhD Projects

- Future projects on System Planning for Energy Storage in Offshore Networks (Ancillary Services)

CATAPULT Offshore Renewable Energy

Department for Business, Energy & Industrial Strategy

University of Strathclyde

MANCHESTER 1824 The University of Manchester

The University Of Sheffield.

# Contact us


**GLASGOW**
**Inovo**
121 George Street
Glasgow
G1 1RD

T +44 (0)333 004 1400

**BLYTH**
**National Renewable Energy Centre**
Offshore House
Albert Street
Blyth, Northumberland
NE24 1LZ

T +44 (0)1670 359 555

**LEVENMOUTH**
**Fife Renewables Innovation Centre (FRIC)**
Ajax Way
Leven
KY8 3RS

T +44 (0)1670 359 555

**HULL**
**O&M Centre of Excellence**
Ergo Centre
Bridgehead Business Park
Meadow Road, Hessle
HU13 0GD